Multiple Choice Questions (40 Marks)

1. A skydiver jumped out of an airplane. On reaching a terminal speed of $60ms^{-1}$, she opened her parachute. Which of the following describes her motion after opening her parachute?

A. She went upwards for a short time, before falling to Earth at speed of $60ms^{-1}$

B. She continued downwards at $60ms^{-1}$, but hit the ground with less force

C. She continued to fall but reached a new terminal speed of less than $60ms^{-1}$

D. She went upwards for a short time, before falling to Earth at at a speed of less than $60ms^{-1}$

2. A gas is enclosed in a metal container with a moveable piston on top. Heat is added to the gas by placing a candle flame in contact with the container's bottom. Which of the following is true about the temperature of the gas?

A. The temperature must go up if the piston remains stationery.

B. The temperature must go up if the piston is pulled out dramatically.

C. The temperature must go up no matter what happens to the piston.

D. The temperature must go down if the piston is compressed dramatically.

3. A voltmeter of resistance 50kΩ is used to measure the electric potential difference in a circuit, as shown. The cell has an electromotive force (emf) of 5.0V and negligible internal resistance.

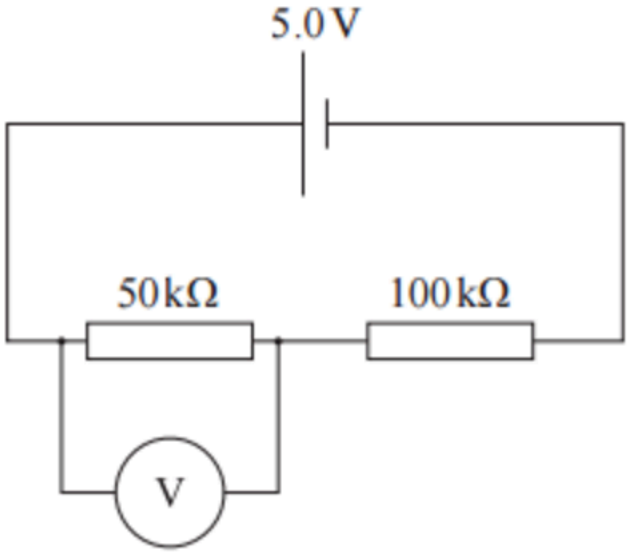

What is the reading on the voltmeter?

A. 1.0V

B. 1.7V

C. 4.0V

D. 5.0V

4. A frictionless trolley of mass *m* moves down a slope with a constant acceleration *a.* A second similar frictionless trolley has mass 2*m*. The acceleration of the second trolley as it moves down the slope is

A. $\frac{1}{2}a$

B. a

C. $2a$

D. $4a$

5. As thermal energy is supplied to a solid and that solid is undergoing a phase change to liquid, choose the option below that best describes the energy state of the matter at a molecular level.

A. its internal energy stays constant while its mean random kinetic energy is also constant.

B. its mean random kinetic energy increases and the intermolecular potential energy stays constant.

C. its mean random kinetic energy and intermolecular potential energy both increases.

D. its mean random kinetic energy is constant while the intermolecular potential energy increases.

6. If the distance between two positive point charges is tripled, then the strength of the electrostatic repulsion between them will decrease by a factor of

A. 3

B. 6

C. 8

D. 9

7. A pump extracts water from a well of depth h at a constant rate of R kg s^{-1}. What is the power required to raise the water?

A. $\frac{R}{gh}$

B. Rgh

C. $\frac{Rg}{h}$

D. $\frac{hg}{R}$

8. What is the refractive index of the air-glass boundary?

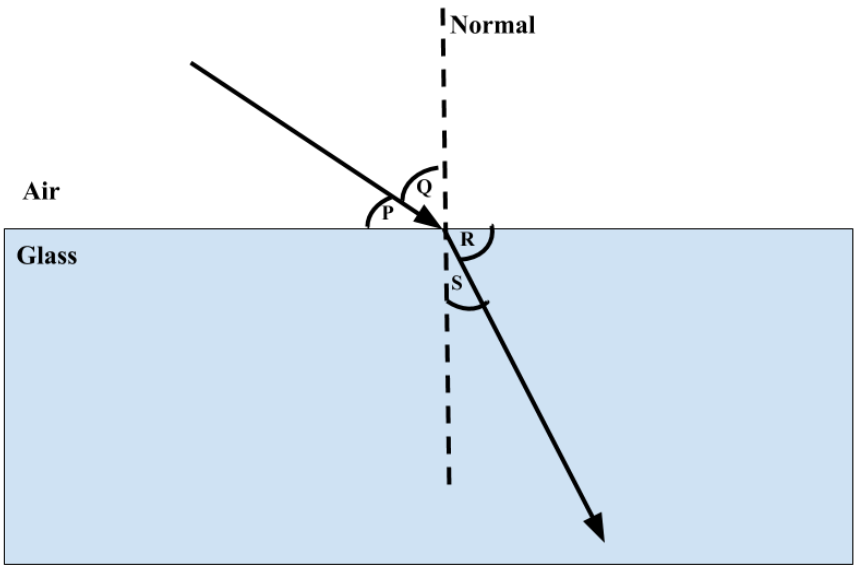

A. $\frac{Sin\ Q}{Sin\ S}$

B. $\frac{Sin\ Q}{Sin\ R}$

C. $\frac{Sin\ P}{Sin\ R}$

D. $\frac{Sin\ P}{Sin\ S}$

9. A small heat engine operates using a pan of 100°C boiling water as the high temperature reservoir and the atmosphere as a low temperature reservoir. Assuming ideal behavior, how much more efficient is the engine on a 10°C day than on a 45°C day?

A. just as efficient.

B. 16 times more efficient.

C. 1.6 times more efficient.

D. 4.5 times more efficient.

10. A positive point charge P and a negative point charge Q of equal magnitude are held at fixed positions. Y is a point midway between P and Q.

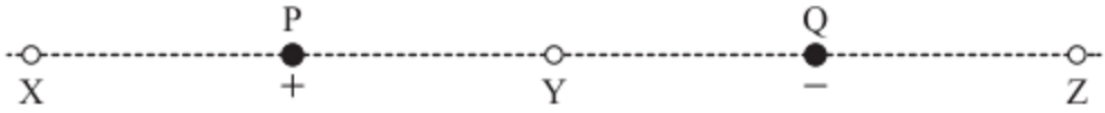

Which of the following gives the direction of the electric field due to the charges at X, Y and Z?

	X	Y	Z
A.	to right	to left	to right
B.	to right	to right	to left
C.	to left	to right	to right
D.	to left	to right	to left

11. A spherical planet of uniform density has three times the mass of the Earth and twice the average radius. The magnitude of the gravitational field strength at the surface of the Earth is g. What is the gravitational field strength at the surface of the planet?

A. $6\,g$

B. $\frac{2}{3}g$

C. $\frac{3}{4}g$

D. $\frac{3}{2}g$

12. Which of the following causes the greatest number of ionizations as it passes through 1cm of air?

(The total energy of the ionizing radiation is the same.)

A. A gamma ray

B. A beta particle

C. An alpha particle

D. An X-ray

13. The volume V of a cylinder of height h and radius r is given by the expression

$$V = \pi r^2 h.$$

In a particular experiment, r is to be determined from measurements of V and h. The uncertainties in V and h are as shown in below.

V	$\pm 7\ \%$
h	$\pm 3\ \%$

A. 10%

B. 5%

C. 4%

D. 2%

14. What factor**s** affect how much energy is required to raise the temperature of a matter by a set amount without undergoing phase changes in a perfectly closed environment?

1. Its initial temperature.
2. Mass of the matter.
3. The composition of the matter.

A. 1 and 2 only

B. 1 and 3 only

C. 2 and 3 only

D. All of the above

15. In the figure below, what is the direction of the magnetic force $\mathbf{F}_B$?

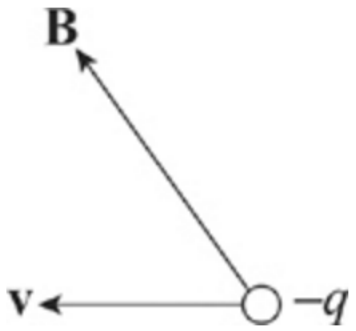

A. Right

B. Left

C. Into the page

D. Out of the page

16. A car moves around a circular path of a constant radius at a constant speed. Which of the following statements is true?

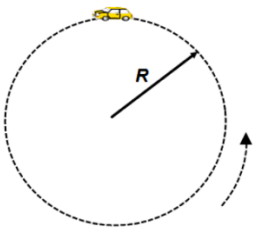

A. The car's acceleration is zero

B. The car's acceleration is constant

C. The car's velocity is directed toward the center

D. The car's acceleration is directed toward the center

17. Negative charges are accelerated by electric fields toward points

A. at lower electric potential

B. at higher electric potential

C. where the electric field is weaker

D. where the electric field is stronger

18. The initial activity of a sample of a radioactive isotope of half-life 10 hours is A. What is the age of the sample when its activity is $\frac{A}{32}$?

A. 30 hours

B. 40 hours

C. 50 hours

D. 320 hours

19. A positron is emitted from a nucleus when a proton changes to a neutron in the nucleus. The Feynman diagram for the quark interaction is shown in Figure 1.

Figure 1

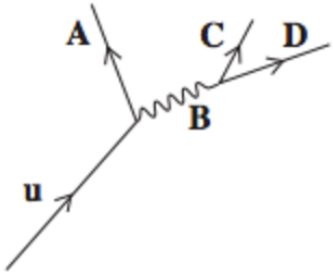

Which answer identify the correct particles labelled for **A**, **B**, **C** and **D** in the diagram?

	Particle A	Particle B	Particle C	Particle D
A.	W^+	Down	Positron	Electron
B.	Positron	W^+	Down	Electron
C.	Down	W^+	Positron	Electron
D.	Down	Positron	W^+	Electron

20. The nuclear reaction

$$^{2}_{1}H + ^{3}_{1}H \rightarrow ^{4}_{2}He + ^{1}_{0}n$$

is an example of

A. Nuclear Fission

B. Nuclear Fusion

C. Radioactive Decay

D. Artificial Transmutation

21. A wave pulse is travelling along a dense thick rope which is connected to a less dense thin rope.

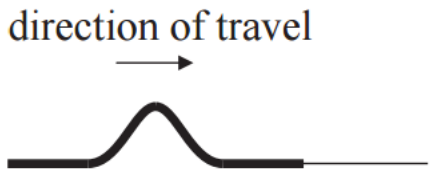

Which of the following is correct regarding the reflected and transmitted wave pulses after the wave pulse reaches the connection of the two ropes?

	Reflected Pulse	**Transmitted Pulse**
A.	Inverted	Inverted
B.	Not inverted	Inverted
C.	Inverted	Not inverted
D.	Not inverted	Not inverted

22. Identify correct assumption**s** when concerning the kinetic model of an ideal gas.

1. Each molecule has small volume, but still has to be accounted for.
2. The molecules undergo perfectly elastic collisions between themselves and also with the walls of their containing vessel.
3. There are no intermolecular forces between the molecules between collisions.

A. 1 and 3 only

B. 2 and 3 only

C. 2 only

D. All of the above

23. Determine the equivalent resistance between points *a* and *b*.

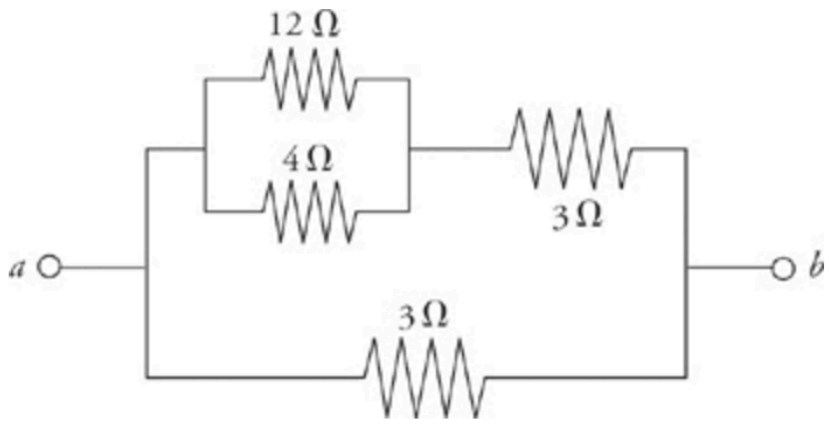

A. 0.25 Ω

B. 0.333 Ω

C.1.5 Ω

D. 2.0 Ω

24. A pump extracts water from a well of depth *h* at a constant rate of *R* kg s^{-1}. What is the power required to raise the water?

A. $\frac{R}{gh}$

B. Rgh

C. $\frac{Rg}{h}$

D. $\frac{hg}{R}$

25. Which of the following is true in respect of both the Coulomb interaction and the strong interaction between nucleons in an atom?

	Coulomb interaction exists between	**Strong interaction exists between**
A.	protons only	neutrons only
B.	both protons and neutrons	neutrons only
C.	protons only	both protons and neutrons
D.	both protons and neutrons	both protons and neutrons

26. In the figure below, what must be the direction of the particle's velocity, *v*?

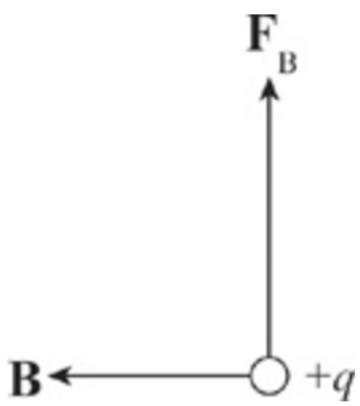

A. Right

B. Left

C. Into the page

D. Out of the page

27. An object rotates with a frequency of 50 Hz. What is the period of rotations?

A. 0.02 s

B. 0.10 s

C. 0.05 s

D. 0.04 s

28. An object of mass 500000g falls from rest in a vacuum. As the object falls, it loses an amount E of gravitational potential energy. What is the speed of this object in terms of E?

A. $\frac{\sqrt{E/500}}{1}$

B. $\frac{\sqrt{E/250}}{1}$

C. $\frac{\sqrt{2E/250}}{1}$

D. $\frac{\sqrt{2E/50}}{2}$

29. If the stone does 5 rotations in 1 second, find the angular velocity of it.

A. 25 $rads^{-1}$

B. 31 $rads^{-1}$

C. 35 $rads^{-1}$

D. 37 $rads^{-1}$

30. There are two wave sources which are S_1 and S_2. Water waves of the same phase, frequency, and amplitude are generated from these wave sources. Point P is located 35cm away from S_1, and 30 cm away from S_2. When the frequency of the water wave is 5Hz and speed of the wave is $5cms^{-1}$, which statement is right?

1. A wavelength of the water wave is 1cm
2. At point P, constructive interference happens
3. If the wavelength of the 2cm, constructive interference happens in point P.

A. 1 and 2

B. 1 and 3

C. 2 and 3

D. 3 only

31. The velocity-time graph of a wave executing simple harmonic motion is a cosine wave. A graph showing energy as a function of time is a

A. straight line of gradient zero

B. negative sine graph

C. straight line of negative gradient

D. straight line of positive gradient

32. A table tennis ball is released from a height h above the floor. 50% of its K.E. is lost at each bounce. Assuming that there are no frictional losses, the height reached by the ball after the second bounce is

A. h/8

B. h/4

C. h/2

D. h/√2

33. A block of mass M is pushed along a horizontal, frictionless surface by a force of magnitude F. The force makes an angle θ with the horizontal.

The magnitude of the acceleration of the block is

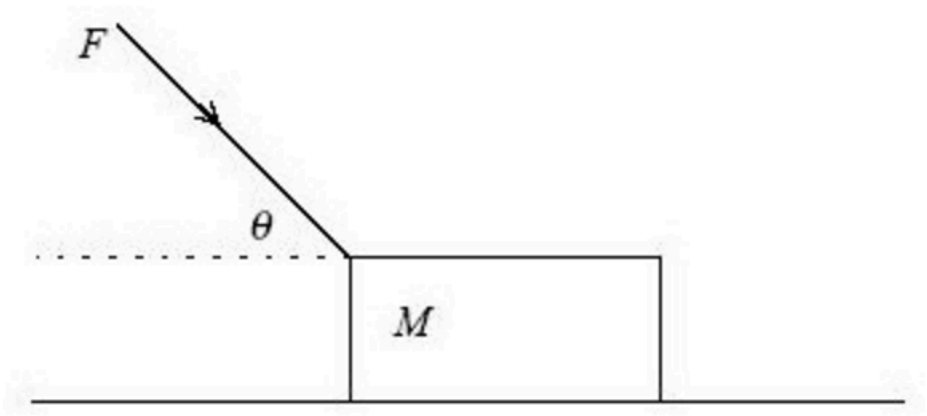

A. zero

B. Fcosθ/M

C. Fsinθ/M

D. F/M

34. A charged oil drop of mass m is balanced between horizontal parallel metal plates separated by a distance d and with a potential difference V. The charge on the drop must be

A. d/mgV

B. mgd/V

C. V/mgd

D. mgV/d

35. A water surface wave (ripple) is travelling to the right on the surface of a lake. The wave has a period of T. The diagram below shows the surface of the lake at a particular instant of time. A piece of cork is floating in the water in the position shown.

Which is the correct position of the cork a time after T/4 later?

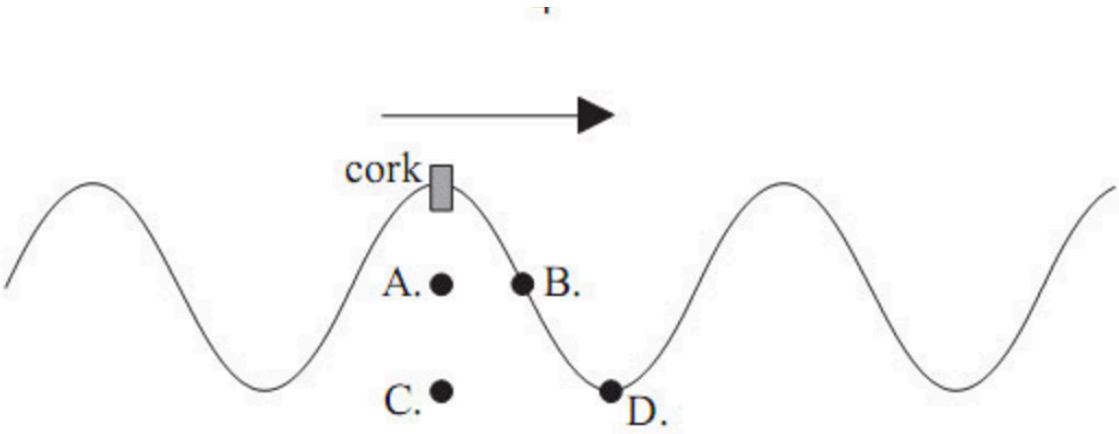

A. Pont A

B. Point B

C. Point C

D. Point D

36. Two similar spheres, each of mass m and radius r are in contact. The spheres attract each other with a gravitational force F_1. One sphere is moved through a distance 3r. The gravitational force between them is now F_2. The ratio F_1/F_2 is equal to

A. 25

B. 16

C. 6.25

D. 9

37. An uneven rod is supported from a peg by means of a string. The friction force between the peg and the string is negligible.

Which of the points best shows the position of the center of gravity of the rod?

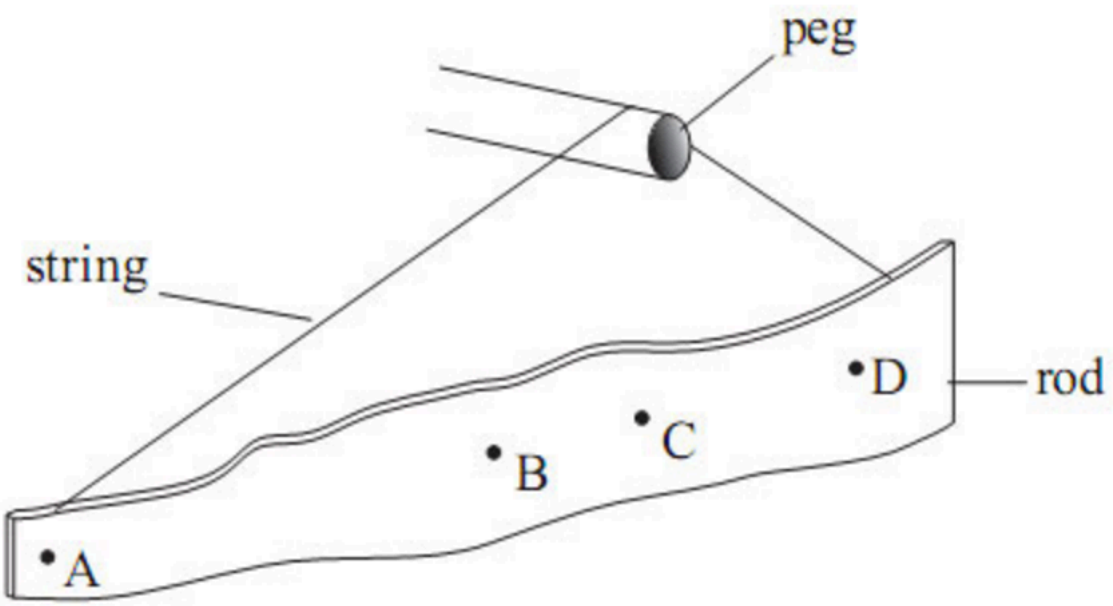

A. Point A

B. Point B

C. Point C

D. Point D

38. A gas is in a vertical cylinder fitted with a piston. Weights are placed on the piston. When the gas is at 27°C the piston is in equilibrium at height h above the base of the cylinder as shown below.
To what value should the gas temperature be increased for the piston to be in equilibrium at a height 2h above the base?

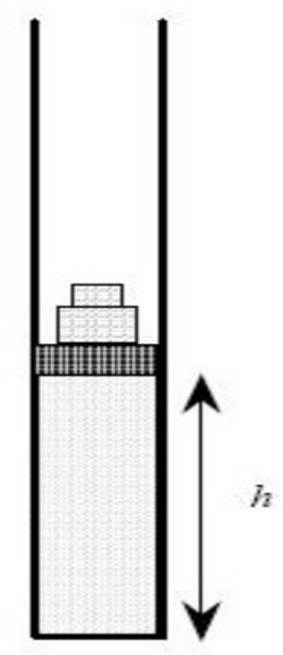

A. 54 °C

B. 150 °C

C. 327 °C

D. 600 °C

39. An ideal gas is reversibly compressed, adiabatically, to half its initial volume. Which of the following quantities decreases?

A. Entropy

B. Internal Energy

C. Pressure

D. Temperature

40. The lowest frequency of a standing wave on string is 120 Hz. The frequency of the third harmonic is

A. 40 Hz

B. 120 Hz

C. 360 Hz

D. 480 Hz

Short Answer Questions (30 Marks)

1.

The speed of the bullet on impact with the clay is V. As a result of the impact, the bullet embeds itself in the clay and the clay is displaced through a height of 20 cm. the mass of the bullet is 3.7×10^{-3}kg and the mass of the clay is 0.89kg. Ignoring the mass of the bullet, calculate the speed of the clay immediately after the impact. (show clear work) [5 marks]

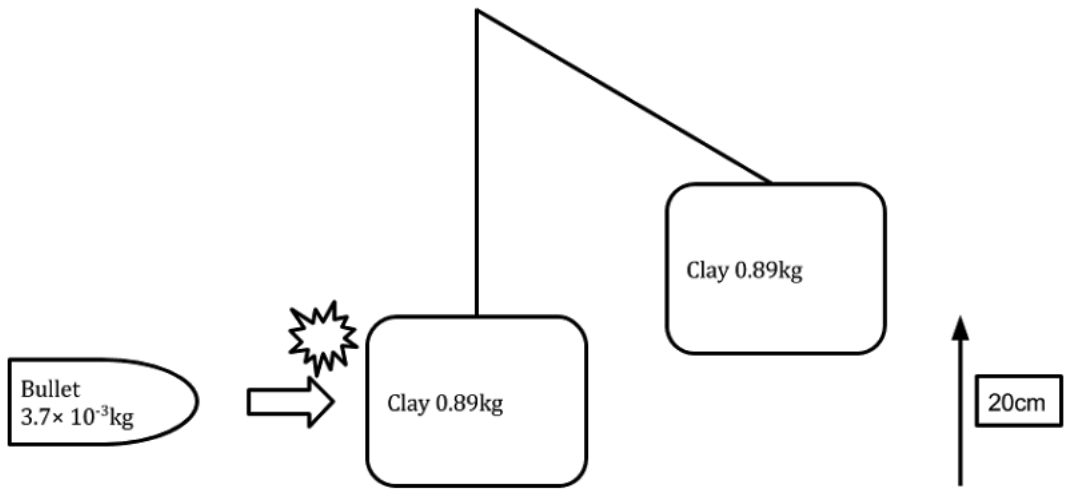

2.

a. Explain in terms of the microscopic (kinetic) model of an ideal gas the difference between the temperature of an ideal gas and its internal energy. [3 marks]

b. A fixed mass of an ideal gas has a volume of $100cm^3$ at a pressure of 1.03×10^5 Pa and a temperature of 25.0°C. The gas is heated at constant pressure to a temperature of 33.0°C. Calculate the change in volume of the gas. [3 marks]

3.

a. What would have happened if neutrons had been used in Rutherford's experiment (in which alpha particles were shot at a thin film of gold and led to the discovery of nucleus in the atom) instead of alpha particles? Explain your answer. [2 marks]

b. Why does ionizing radiation travel further in air if the pressure is reduced? [2 marks]

4. Young children enjoy playground rides and people from all countries seem to enjoy the thrills of amusement park rides. Explain how it is possible for the passengers to be upside-down without falling out of the carriage. Please answer fully. [4 marks]

5.

a) A battery of emf ε and negligible internal resistance is connected in series to two resistors. The current in the circuit is I.

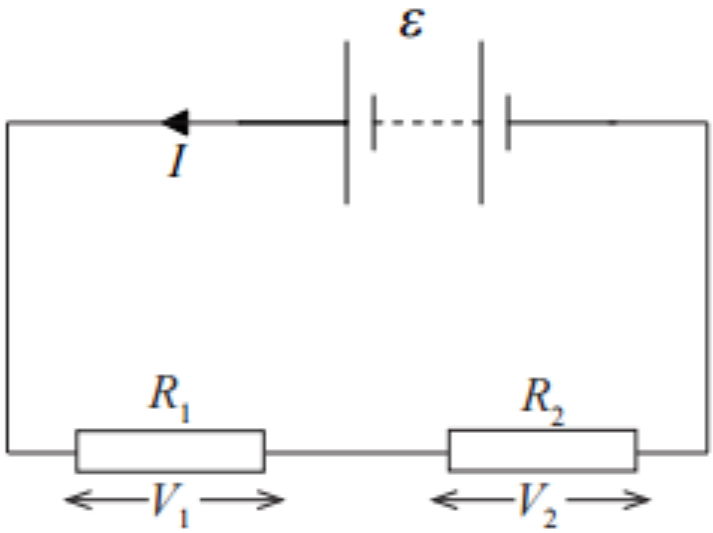

i) State an equation giving the total power delivered by the battery. [1 mark]

ii) The potential difference across resistor R_1 is V_1 and that across resistor R_2 is V_2. Using the law of the conservation of energy, deduce the equation below. [2 marks]

$$\varepsilon = V_1 + V_2$$

b) The graph shows the I-V characteristics of two conductors, X and Y. [3 marks]

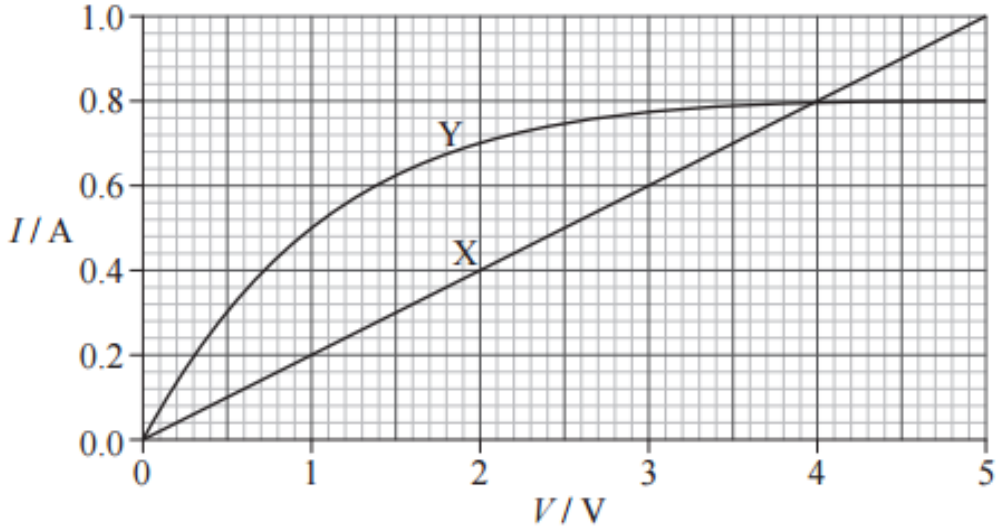

On the axes below, sketch graphs to show the variation with potential difference V of the resistance of conductor X (label this graph X) and conductor Y (label this graph Y). You do not need to put any numbers on the vertical axis.

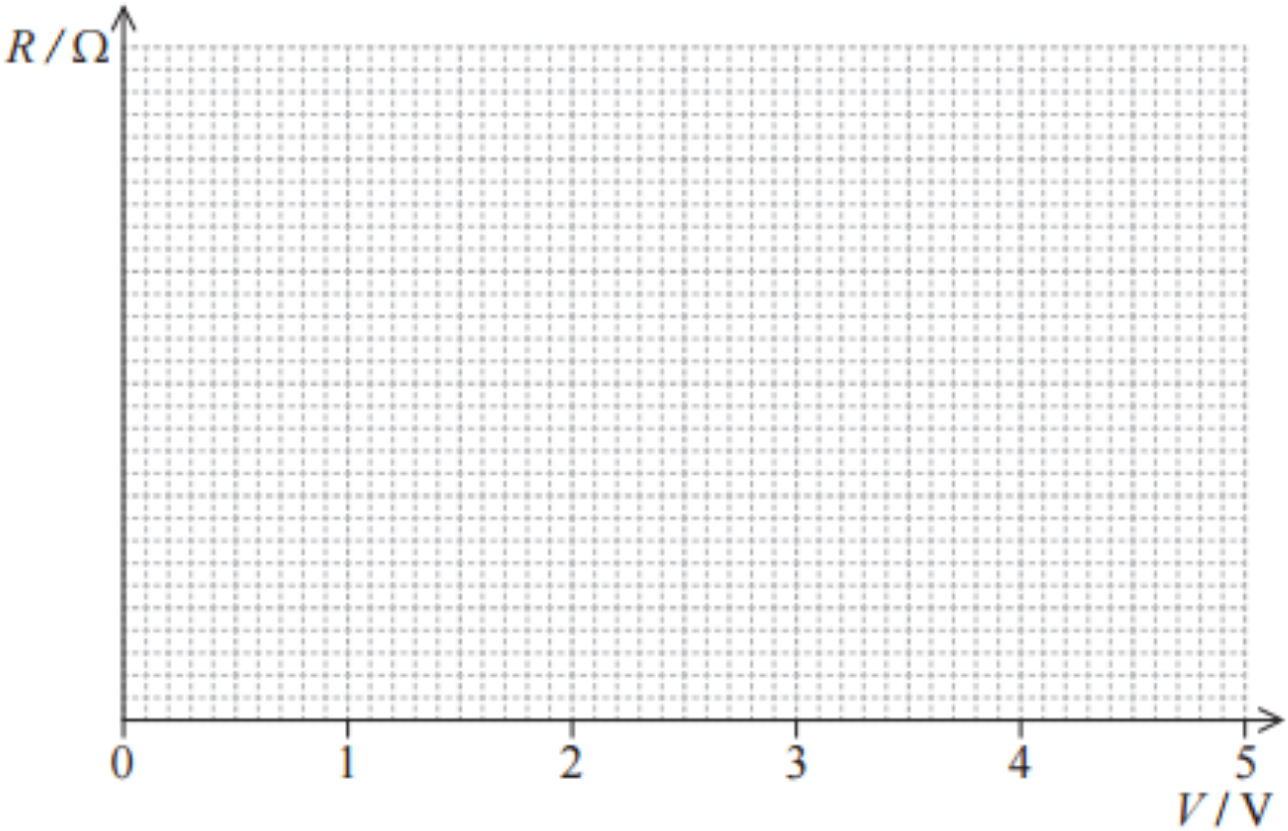

c) The conductors in b) are connected in series to a battery of emf ε and negligible internal resistance.

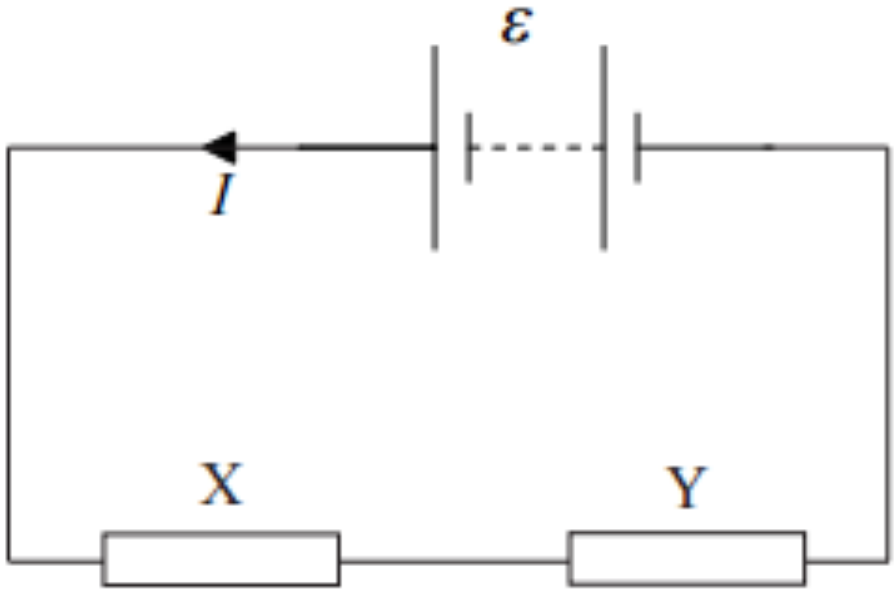

The power dissipated in each of the two resistors is the same.
Using the graph given in b),

i) determine the emf of the battery. [1 mark]

ii) calculate the total power dissipated in the circuit.[2 marks]