KSO 2018 x DALTON

Written Exam

1hr 30 mins

Physics

INSTRUCTIONS:

1. Please write your name (name on your name tags), grade, and school on both this exam booklet and the scantron (bubble) sheet provided.
2. NO CALCULATOR is allowed.
3. Fill in the bubble clearly and erase the bubble COMPLETELY if you would like to make a change.
4. If you are using a pen for bubbling, make sure to cross out any answers you don't want to be marked for.
5. Write clearly for FRQ, any handwriting that cannot be deciphered will not be scored.
6. Look at your own paper ONLY.
7. If you complete your exam early, please leave all pieces of paper in a neat pile on your desk and make your way to the new cafe for snacks. (You will not be allowed to leave in the last 10 minutes should you finish early)

NAME:

GRADE:

SCHOOL:

1. A magnetic force acts on an electric charge in a magnetic field when
    a. The charge is not moving.
    b. The charge moves in the direction of the magnetic field.
    c. The charge moves in the opposite direction to the magnetic field.
    d. The charge moves at right angles to the lines of the magnetic field.
    e. The direction of the charge cannot be known.
2. Which of the following must always be true?

I. If an object's acceleration is constant, then it must move in a straight line.
II. If an object's acceleration is zero, then its speed must remain constant.
III. If an object's speed remains constant, then its acceleration must be zero.

    a. I and II
    b. I and III
    c. II
    d. III
    e. II and III
3. A rope of length 4 m is stretched to a tension of 60 N. If its mass is 3 kg, at what speed would a 8 Hz transverse wave travel down the string? All answers are rounded up to whole numbers.
    a. 2 m/s
    b. 12 m/s
    c. 15 m/s
    d. 20 m/s
    e. 9 m/s
4. For a system that undergoes a small change of state,

$$\Delta Q = \Delta U + \Delta W$$

where $+\Delta Q =$ thermal energy transferred to the system
$+\Delta U =$ increase in internal energy of the system
$+\Delta W =$ the work done by the system.

In an adiabatic compression of an ideal gas, which one of the following is true in respect of $\Delta Q,\ \Delta U,\ and\ \Delta W$?

    a. zero , positive, negative
    b. zero , negative, positive
    c. positive, positive, negative
    d. positive, positive, positive
    e. negative, zero, positive
5. Which of the following best approximates the energy of a photon whose wavelength is 3 nm? (Planck's constant, h, has a value of $6.6 \times 10^{-34} J \bullet s$.)
    a. 2.2×10^{-34} J
    b. 2.2×10^{-17} J
    c. 6.6×10^{-17} J
    d. 19×10^{-25} J
    e. 1×10^{-34} J

6. An object of mass 1 kg, moving in a circular path of radius 0.4 m, experiences a centripetal acceleration of constant magnitude 10 m/s^2. What is the object's angular speed?
    a. 5 rad/s
    b. 2 rad/s
    c. 0.8 rad/s
    d. 0.4 rad/s
    e. 4 rad/s
7. A body moves with uniform speed around a circle of radius r. The period of the motion is T. What is the speed of the body?
    a. $\pi r^2/T$
    b. zero
    c. $\pi r/T$
    d. $2\pi r^2/T$
    e. $2\pi r/T$
8. A battery is used to charge a capacitor with capacitance C, and an amount of charge Q is stored on the plates of this capacitor. If an identical battery is used to charge it, which of the following expressions indicates how much charge is stored on the plates of a second capacitor with capacitance of 3C?
    a. Q
    b. 9Q
    c. 3Q
    d. 1/9 Q
    e. ⅓ Q
9. A soccer ball, starting at rest, is kicked with an initial velocity of 10m/s at 30° from the ground. Calculate its total flight time ignoring air resistance.
    a. 0.5 s
    b. 1 s
    c. 1.7 s
    d. 2 s
    e. 4 s

Use this information for questions #2 and #3. A 4.0 kg bowling ball is moving to the left at 6 m/s. It collides in a perfectly elastic collision with a 8.0 kg bowling ball that is moving to the right at 3.0 m/s. Assume positive is to the right.

10. What is the velocity of the 4.0 kg ball and 8.0 kg ball after the collision?
    a. -6 m/s, 3m/s
    b. 3 m/s, -6 m/s
    c. 6 m/s, -3 m/s
    d. -3 m/s, 6m/s
    e. -3 m/s, -6 m/s

11. What is the total kinetic energy after the collision?
    a. 108 J
    b. 54 J
    c. 72 J
    d. 36 J
    e. 162 J
12. A crate of mass 100 kg is at rest on a horizontal floor. The coefficient of static friction between the crate and the floor is 0.5, and the coefficient of kinetic friction is 0.4. A force of *F* with magnitude 340 N is then applied to the crate, parallel to the floor. Which of the following is true?
    a. The crate will accelerate across the floor at 0.5 m/s^2.
    b. The maximum static friction force will also have a magnitude of 340 N.
    c. The crate will slide across the floor at a constant speed 0.5 m/s.
    d. The crate will not move.
    e. None of the above.
13. The specific latent heat of fusion of a substance is defined as the amount of thermal energy required to change the phase of
    a. The substance to gas at constant temperature.
    b. Unit mass of the substance at constant temperature.
    c. The substance to gas at varying temperature.
    d. Unit mass of the substance to liquid at constant temperature.
    e. The substance at constant temperature.
14. Light is moving through a substance that has a refractive index value n of 1.5, and the light is approaching another substance that has an n value of 1.3. At what angle of incidence will the light begin being totally internally reflected, rather than passing into the new substance?
    a. $\theta = sin^{-1}(1/1.5)$
    b. $\theta = sin^{-1}(1/1.3)$
    c. $\theta = sin^{-1}(1.3/1.5)$
    d. $\theta = sin^{-1}(1.5/1.3)$
    e. $\theta = sin^{-1}(0.2)$
15. The moon has mass M and radius R. A small ball is dropped from a distance of 5R from the moon's centre. The object's impact speed when it strikes the surface of the moon is equal to $\sqrt{\frac{kGM}{R}}$ for k =
    a. ⅕
    b. ⅖
    c. ⅘
    d. 1 ⅕
    e. 1 ⅗

16. The current in the circuit shown below is constant when the switch is closed.

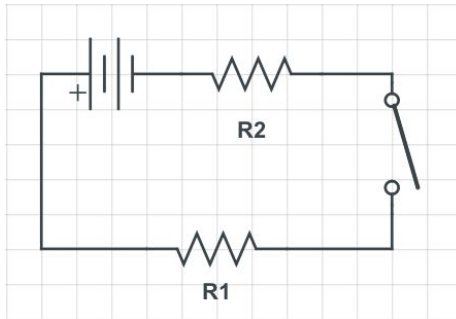

The energy transfer in the internal resistance R2 of the battery is 30 J when a charge of 35 C passes through it. For the same amount of charge, 40 J of energy is transferred in the resistor R1. Which of the following gives the e.m.f. of the battery?

a. 30/35 V
b. 2 V
c. 40 /35 V
d. 10/35 V
e. 20/30 V

17. The conservative force exerted on a given particle as a function of position x is found to be F(x) = $-\frac{1}{x+1}$ for positive x values, where x is in metres. From x = 1m to x = 3m, by how much does the particle's potential energy change? [Use these values for calculations: ln (1) = 0, ln (2) = 0.7, ln (3) = 1.1, ln (4) = 1.4]

a. 1 J
b. 0. 11 J
c. 0.7 J
d. 2.1 J
e. 1.8 J

18. An isolated container is divided into two equal volumes by a partition. In each part of the container there is an ideal gas. They have the same pressure P. The partition is removed. Which of the following is the final pressure.

a. 2P
b. P
c. P/2
d. 3P/2
e. 4P

19. A 0.12 m diameter CD is rotating at 480 rpm. Which of the following values best represents the tangential velocity of the edge of the CD? [You may use these values: π = 3.14, 2π = 6.28 (approximated heavily for simple calculations)]

a. 3 m/s
b. 4 m/s
c. 18 m/s
d. 6 m/s
e. 36 m/s

20. A particle of charge q is at point A in a uniform electric field of strength *E*. The particle moves a distance w parallel to the field lines and then a distance z perpendicular to the field lines to reach point B.

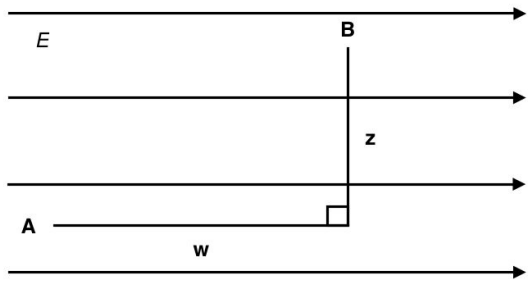

What is the change in electric potential energy of the charge between A and B?

a. Eqw
b. Eqz
c. Eq (w+z)
d. Eq $\sqrt{w^2 + z^2}$
e. Eqzw

21. Which of the following quantities are conserved during all nuclear reactions?

a. # of protons
b. # of neutrons
c. # of nucleons
d. # of electrons
e. All of the above.

22. A net force of magnitude 5.0 N acts on a body of mass 3.0 kg for 9.0 s. The body is initially at rest. Which of the following is the speed of the body after the 9.0 s interval?

a. 5 m/s
b. 7 m/s
c. 9 m/s
d. 10 m/s
e. 15 m/s

23. Light from a double slit arrangement produces bright and dark fringes on a screen in the region near point P, as indicated below.

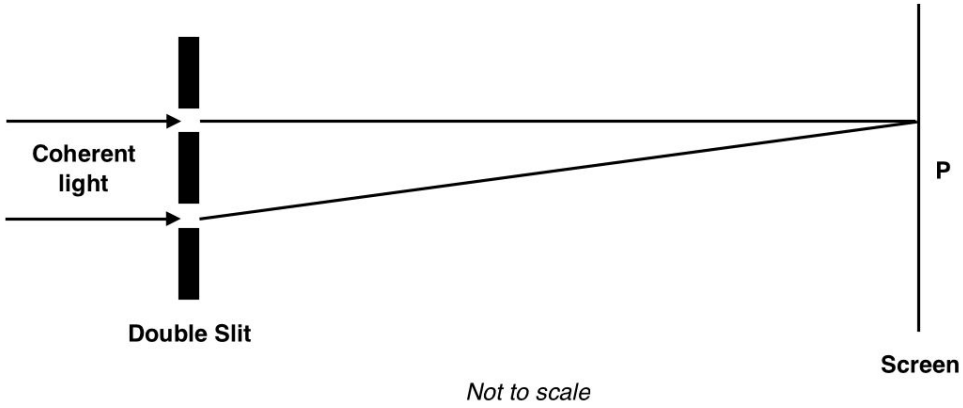

The light from the two slits has equal amplitudes on reaching point P. Which on the following gives the change, if any, in the appearance of the bright and the dark fringes when the amplitude of the light wave from one slit is reduced?

a. Remains the same, becomes more bright
b. Remains the same, remains the same
c. Becomes less bright, remains the same
d. Becomes more bright, becomes more bright
e. Becomes less bright, becomes more bright

24. If the amplitude of a sound wave is decreased, what will be the change in the sound perceived by observers who are hearing the sound?
    a. Quieter sound
    b. Lower pitch
    c. Both lower sound and lower pitch
    d. Neither sound nor pitch is affected.
    e. Louder sound
25. A rocket on the surface of a planet of radius R is launched with a speed that is quarter of the escape velocity. What is the maximum height reached by the rocket above the surface?
    a. R
    b. R/5
    c. R/3
    d. R/15
    e. 16R/15

26. Boiling water in a beaker is heated continuously. Steam escapes into the surroundings. Which of the following correctly lists the entropy changes of the boiling water and of the surroundings?
    a. Increases, increases
    b. Increases decreases
    c. Increases, constant
    d. Decreases, constant
    e. Decreases, increases
27. How much power must a motor supply in order to pull a 100 kg box along a horizontal surface if the box is to move at a constant rate of 2 m/s, if the coefficient of kinetic friction between the box and the surface is 0.3?
    a. 600 W
    b. 500 W
    c. 400 W
    d. 300 W
    e. Cannot be determined
28. Two particles move toward each other, collide, and separate. If there was no net external force acting on the particles, but kinetic energy was lost, then:
    a. The collision was elastic and total linear momentum was conserved.
    b. The collision was not elastic and total linear momentum was conserved.
    c. The collision was elastic and total linear momentum was not conserved.
    d. The collision was not elastic and total linear momentum was not conserved.
    e. None of the above.
29. For a body undergoing simple harmonic motion, the velocity and acceleration are
    a. Always in the same direction.
    b. Always in opposite direction.
    c. In the same direction for a quarter of the period.
    d. In the same direction for half the period.
    e. None of the above.
30. At a certain start time for a decay experiment, a radioactive sample is decaying at a rate of 30,000 decays per minute. At a time 8 hours beyond the start time, the sample is undergoing 7,500 decays per minute. Which of the following values is closest to the sample's decay rate at a time 16 hours beyond the start time?
    a. 0 decays per minute
    b. 3750 decays per minute
    c. 7500 decays per minute
    d. 1875 decays per minute
    e. 1625 decays per minute

31. A block attached to an ideal spring undergoes SHM (simple harmonic motion) about its equilibrium position (x=0) with amplitude A. What fraction of the total energy is in the form of kinetic energy when the block is at position x = ¼ A?
    a. 15/32
    b. 15/16
    c. 3/8
    d. 1/4
    e. 1/2
32. The position vs. time function of a moving 3 kg point mass is $x(t) = 25t^3 + 5t$. The function that describes the change in momentum of this particle as a function of time is:
    a. $450t^2$
    b. $225t^2 + 15$
    c. $75t^2 + 5$
    d. 450t
    e. 75t
33. A particle starts from rest and moves in a straight line. Its motion is represented in the acceleration vs. time graph below. At which point is its velocity maximum?

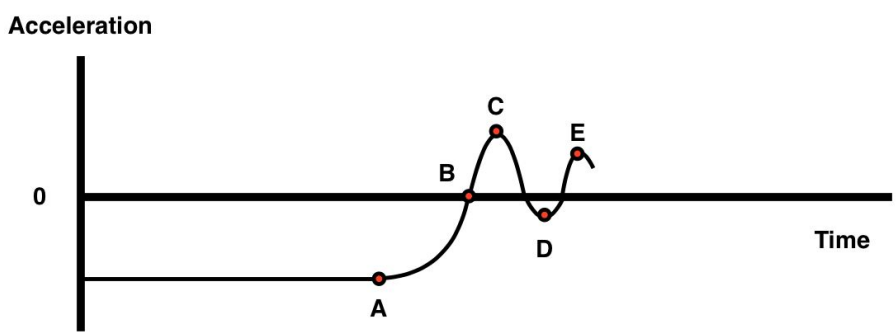

    a. A
    b. B
    c. C
    d. D
    e. E
34. A charge of -2Q is transferred to a solid metal sphere of radius r. Where will this excess charge reside?
    a. -Q at the centre, and -Q on the outer surface.
    b. -2Q at the centre.
    c. -½ Q at the centre, -½ Q in a ring of radius ½ r, and -Q on the outer surface.
    d. -2Q on the outer surface.
    e. Cannot be determined.

35. A loop made of conducting material is rotated about the vertical axis XY. At all times during the rotation the loop is in a region of uniform magnetic field

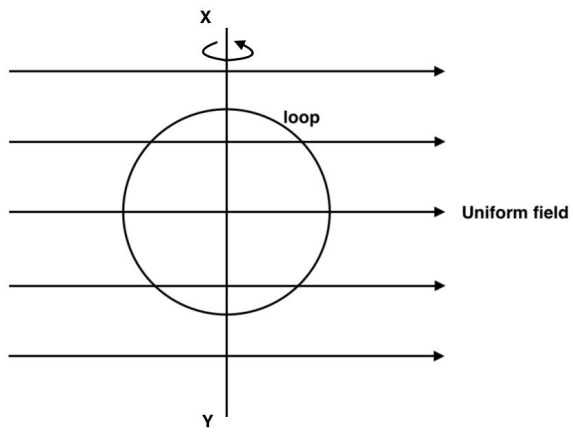

At a particular instant, in the position shown, the plane of the loop is parallel to the direction of the magnetic field. At this instant which one of the following about the induced current and the flux is true?

a. Maximum, maximum
b. Zero, maximum
c. Maximum, zero
d. Zero, zero
e. Cannot be determined

FRQ 1

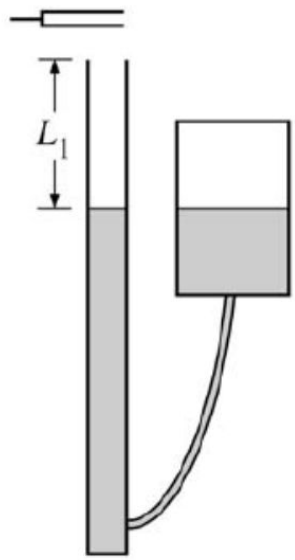

Resonance 1

A vibrating tuning fork is held above a column of air, as shown in the diagrams above. The reservoir is raised and lowered to change the water level, and thus the length of the column of air. The shortest length of air column that produces a resonance is $L_1 = 0.15$ m, the next resonance is heard when the air column is $L_2 = 0.45$ m long, and the next resonance is when the air column is $L_3 = 0.75$ m long. Assume that the speed of sound in air is 330 m/s.

1. Draw a diagram of harmonics.

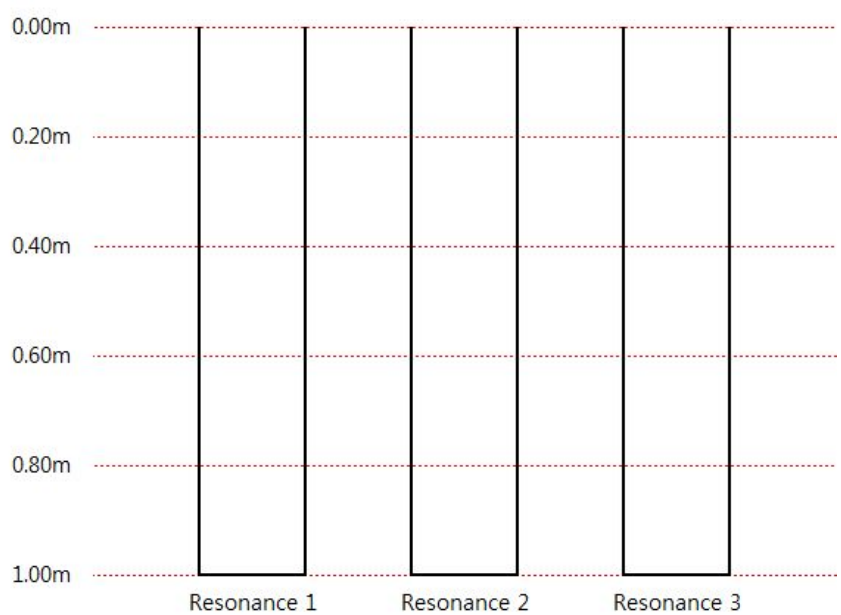

2. Find the wavelength of the standing waves produced.

3. Calculate the frequency of the tuning fork.

4. The length of the tube is 1.0 m. Would it be possible to hear more resonances than given?

FRQ 2

A heating coil is to be made of wire of diameter 3.5×10^{-4}m. The heater is to dissipate 980W when connected to a 230V DC supply. The material of the wire has resistivity 1.3×10^{-6} Ωm at the working temperature of the heater.

1. Calculate the resistance of the heating coil at its normal working temperature.

2. Calculate the length of wire needed to make the heating coil.

3. The fuse has blown in your heater and needs to be replaced, unfortunately you cannot read the rating of the current fuse. You have a choice of buying them in the following options, 1A, 3A, 5A, 13A. Which one should you buy, explain your choice?

FRQ 3

Abbie and Sophia are at a playpark playing on a roundabout powered by children that is frictionless. The roundabout consists of a flat solid bottom with a diameter of 2 meters. Extending through the center of the roundabout are handles that the riders hold on to or are used to push the roundabout. There is a ring in the centre that serves as a bench which has a radius of 1 meters. The moment of inertia for the whole roundabout as well as riders is 575 kgm^2.

Abbie pushes the roundabout with a net force that varies uniformly from 0 Newtons to 25 Newtons for the duration of 30 seconds. After 30 seconds, Abbie pushes the roundabout with a constant force of 40 newtons for 30 seconds more. At that point, Sophia jumps on the edge of the roundabout and rides it with the riders.

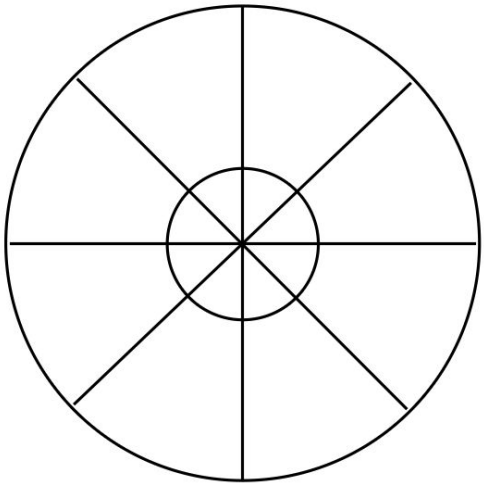

Figure - Roundabout

a. Create a graph of torque vs. time for the motion of the roundabout for the first 40 seconds. (Make sure to label the axis with correct titles and values).

b. Calculate the linear speed of a point on the edge of the roundabout round at t = 40 seconds just <u>before</u> Sophia jumps on.

c. Calculate the linear speed of a point on the edge of the roundabout if Abbie, with mass equal to 40 kg, jumps up and rides at the edge.